IS341/SIS334
BPM

Process Simulation

Flow analysis equations for cycle time

$$CT = T_1 + T_2 + \ldots + T_N$$

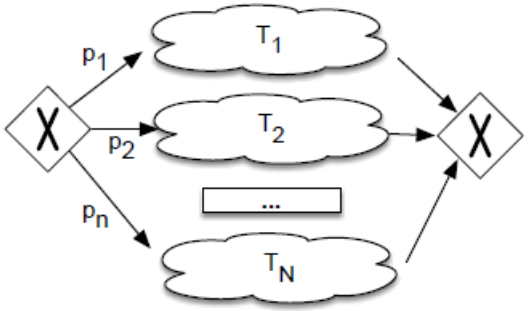

$$CT = p_1 * T_1 + p_2 * T_2 + \ldots + p_n * T_N$$

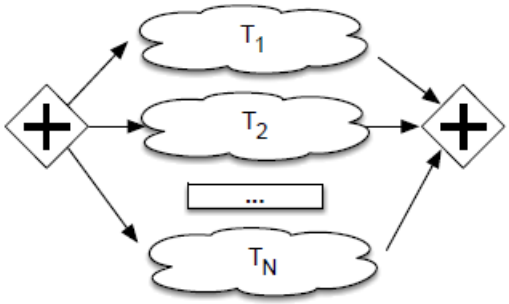

$$CT = \max(T_1, T_2, \ldots, T_N)$$

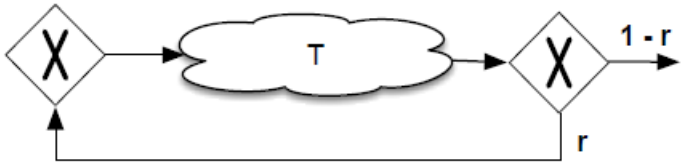

$$CT = T / (1-r)$$

Business Process simulation
Single instance Simulation

- Calculate cycle time for the flow analysis.
- Calculate the process performance through evaluating the cost and time for one running instance.
- Consider the following data for the computer repair example:

  Activity processing times
  - Perform initial check up: 5 min
  - Repair hardware: 3 hours
  - Configure Software: 1 hour
  - Inform customer: 5 min
  - Test computer: 15 min
  - Issue shipment: 10 min
  - Payment received : 30 min

  Cost
  - Staff member: 40 € / hour, each invoice sent: 1.5 €

CYCLE TIME

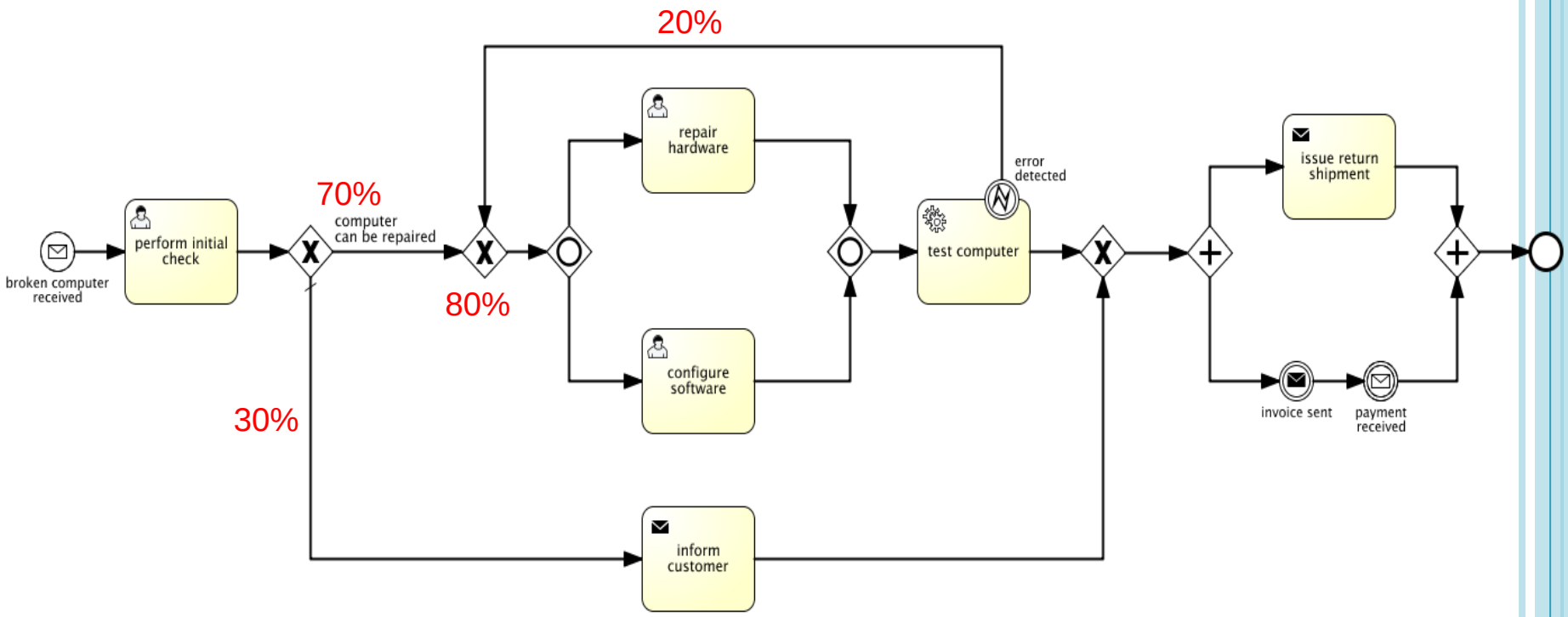

- Cycle time= 5min+(0.3*5min)+0.7*[(max(60min,180min)+15min)/0.8] + max(10 min, 30 min) =207.125min→3.45 hours

Computer Repair Example- Step Through simulation

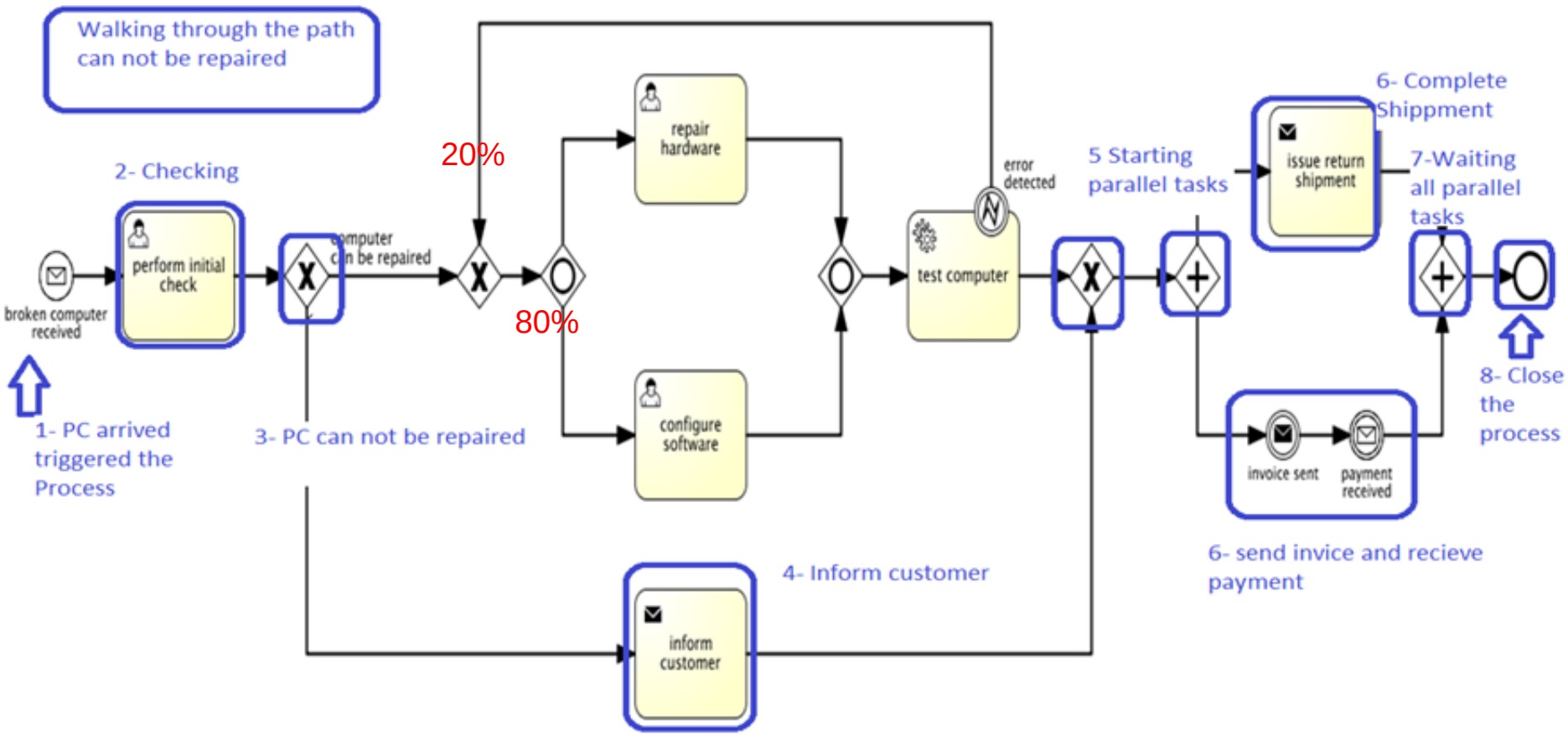

Business Process simulation
Single instance Simulation

Calculate the path for pc can not be repaired (time and cost)

Total cost for one instance run

=Initial check + inform customer + issue shipment + invoice+ payment

= 5min*40/60 + 5min*40/60 + 10min*40/60 + 1.5+(30min*40/60)

= 3.33 + 3.33+ 6.66 + 21.5 = 34.82 €

Total time for one instance run

= 5 min + 5 min + max(10 min, 30 min) = 40 min

Computer Repair Example- Step Through simulation

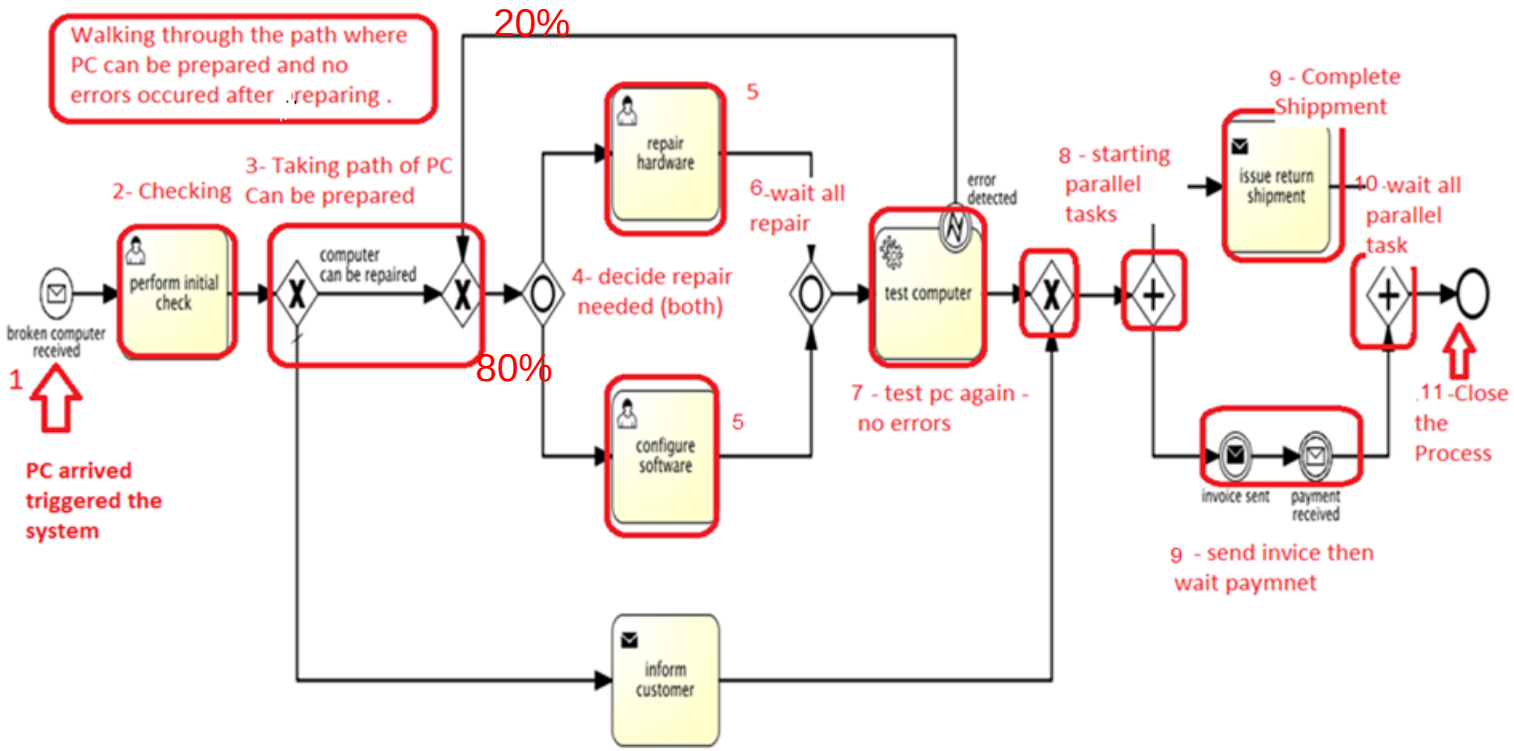

Business Process simulation
Single instance Simulation

Calculate the path for pc can be repaired (time and cost) no errors

Total Cost for one instance run

=Initial check + HW + SW+ test + issue shipment + invoice+ payment

= 5min*40/60 + 3hours*40 +1hour*40 + 15 min*40/60+10min*40/60 + 1.5+(30min*40/60)

= 3.33 + 120+ 40 +10+ 6.66 + 21.5 = 201.49 €

Total time for one instance run :

= 5 min + Max(3 hours +1 hour) + 15 min+ max(10 min, 30 min)

= 3 hours and 50 min

Computer Repair Example- Step Through simulation

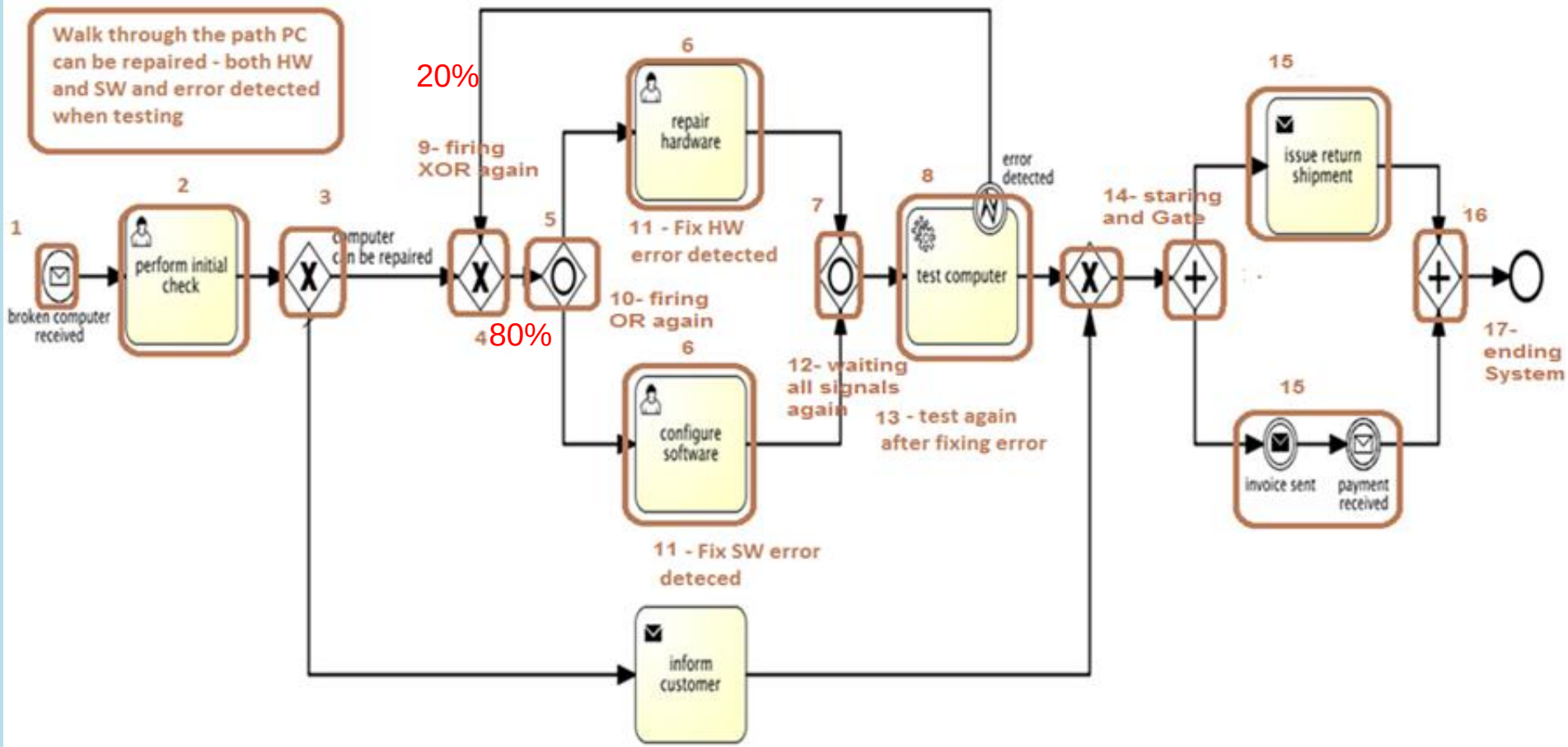

Business Process simulation
Single instance Simulation

Calculate the path for pc can be repaired – error detected in both (time and cost)

Total Cost for one instance run

=Initial check + [HW + SW+ test]/0.8+ issue shipment + invoice + payment]

= 5min*40/60 + [3hours*40 +1hour*40+(15 min*40/60)]/0.8 + 10min*40/60 + 1.5 + (30min*40/60)]

= 3.33 + [120 +40+(10)]/0.8+ 6.66 + 21.5 =243.99 €

Total time for one instance run :

= 5 min + [max(3 hours ,1 hour) + (15 min)]/0.8+ max(10 min,30 min)
= 278.75 min=4.64 hours

Computer Repair Example- Step Through simulation

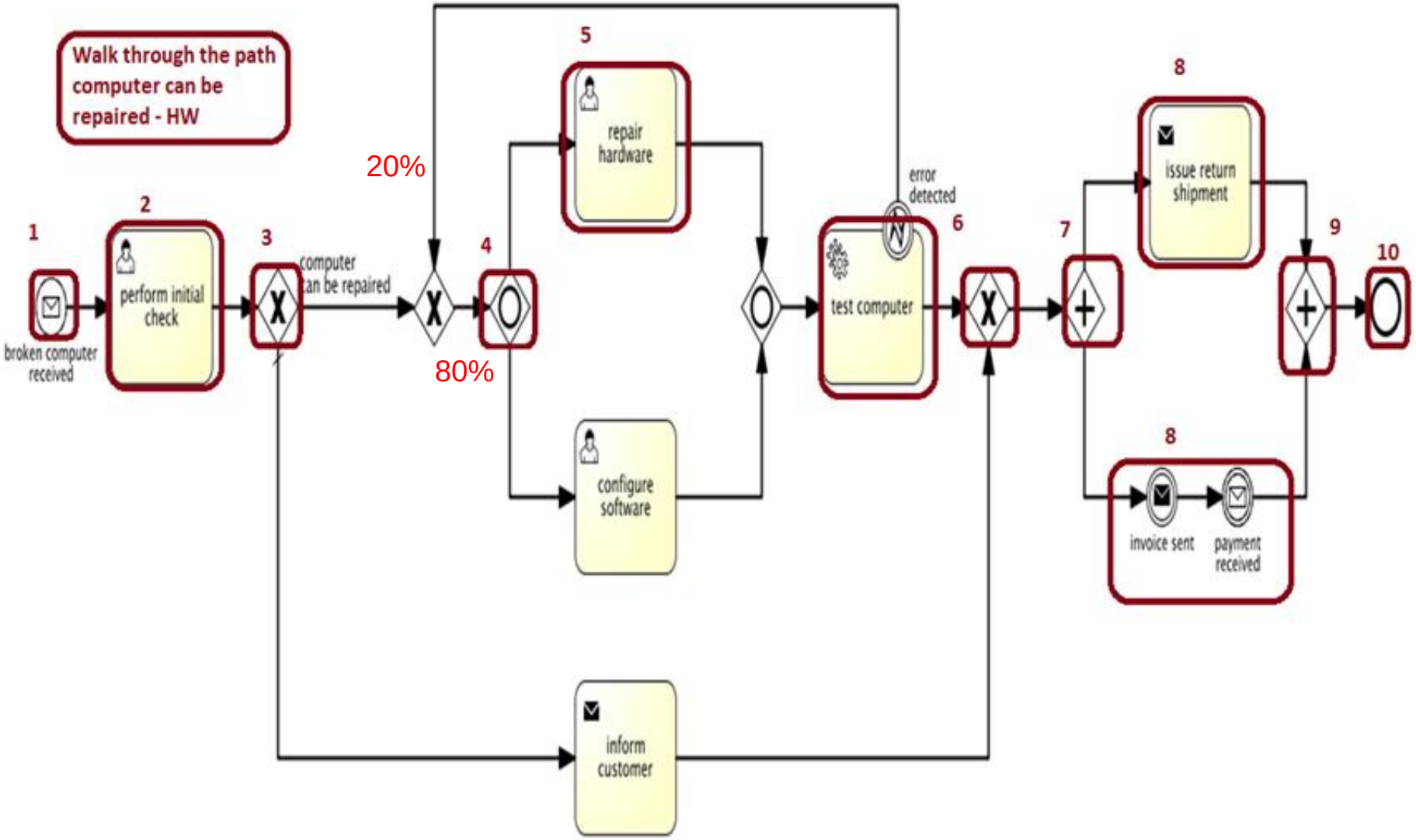

Business Process simulation
Single instance Simulation

Calculate the path for pc can be repaired – HW with no error

Total Cost for one instance run

=Initial check + HW+[test pc]+ issue shipment + invoice + payment

= 5min*40/60 + 3hours*40 + 15 min*40/60+10min*40/60 +1.5+ 30min*40/60)

= 3.33 + 120 + 10+ 6.66 + 21.5 = 161.49 €

Total time for one instance run :

= 5 min + 3 hours + (15 min)+ max(10 min, 30 min) = 3 hours and 50 min

Computer Repair Example- Step Through simulation

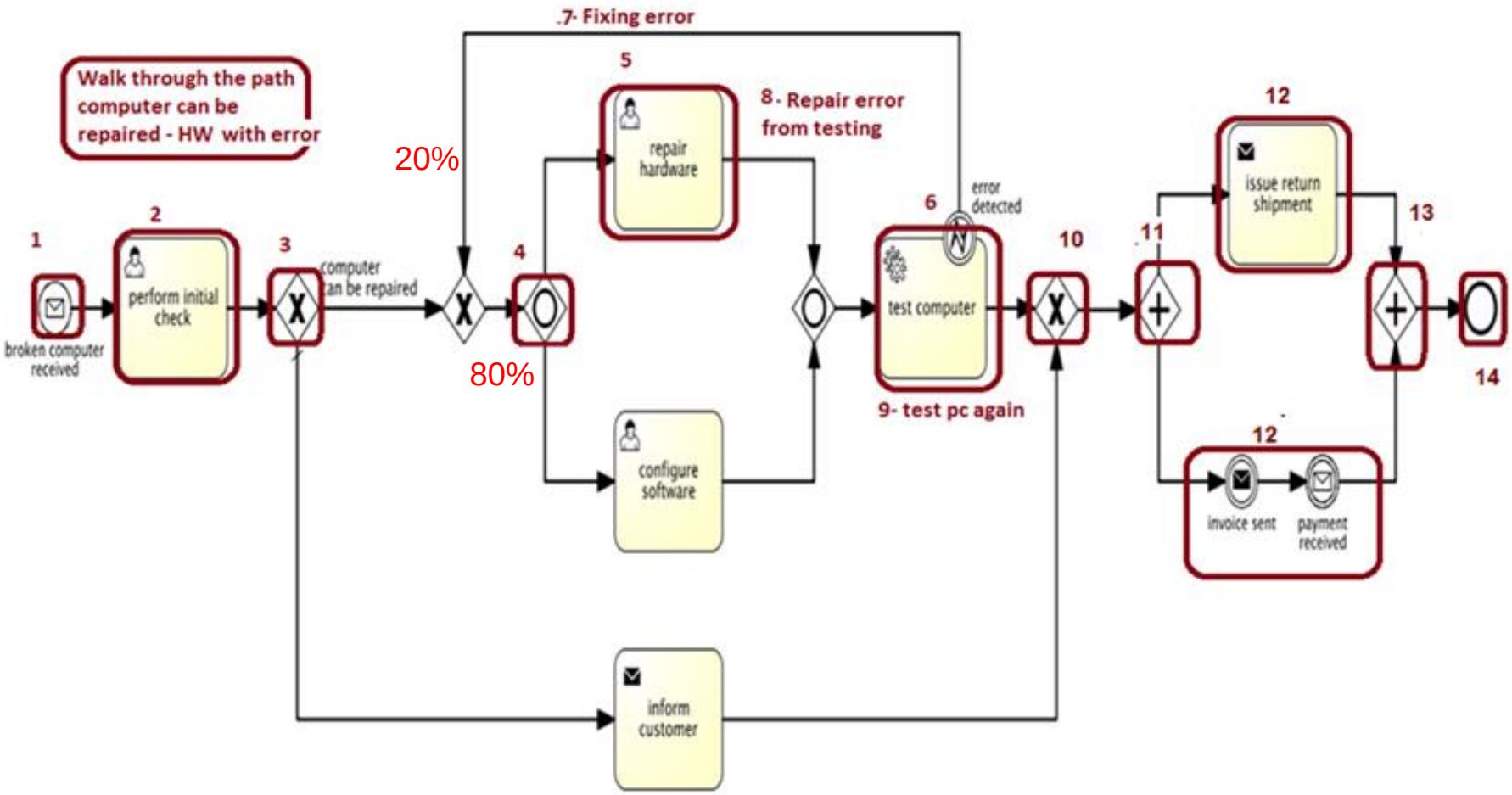

Business Process simulation
Single instance Simulation

Calculate the path for pc can be repaired – HW with error

Total Cost for one instance run

=Initial check + [repair HW + test pc]/0.8+ issue shipment + invoice + payment]

= 5min*40/60 + [(3hours*40) +(15min*40/60)]/0.8+10min*40/60+1.5+(30min*40/60)

= 3.33 + [(120) + (10)]/0.8+ (6.66 + 21.5) = 193.99 €

Total time for one instance run :

= 5 min +[(3 hours) + (15 min)]/0.8+ max(10 min, 30 min) = 278.75 min=4.65 hours

Computer Repair Example- Step Through simulation

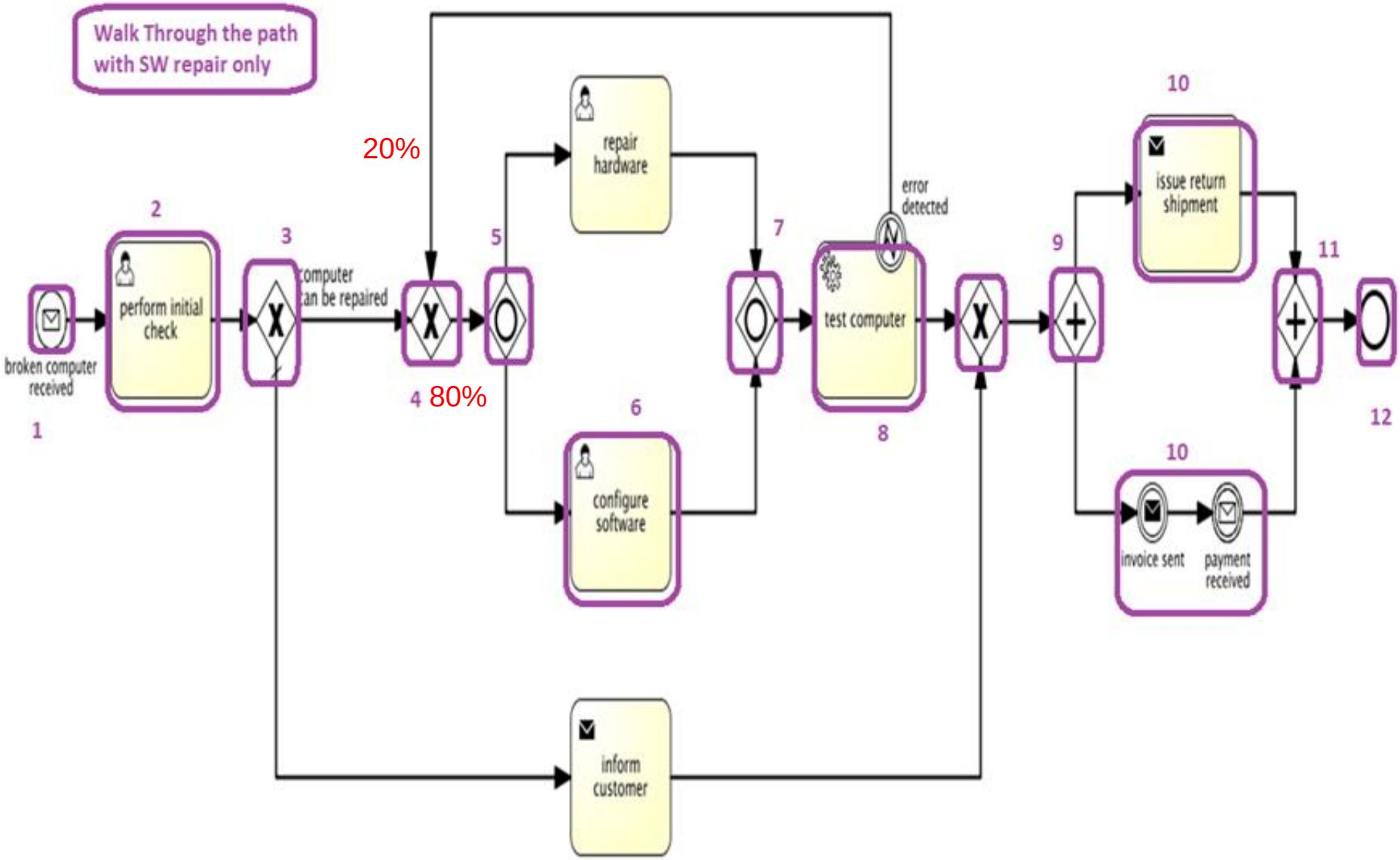

Business Process simulation
Single instance Simulation

Calculate the path for pc can be repaired – SW with no error

Total Cost for one instance run

=Initial check + configure SW + test pc+ issue shipment + invoice+ payment

= 5min*40/60 + (1hour*40) +(15 min*40/60)+10min*40/60 + 1.5+ 30min*40/60)

= 3.33 + 40 + 10 + 6.66 + 21.5 = 81.49 €

Total time for one instance run :

= 5 min + 1 hour + 15 min+ max(10 min, 30 min)

= 1 hours and 50 min

Computer Repair Example- Step Through simulation

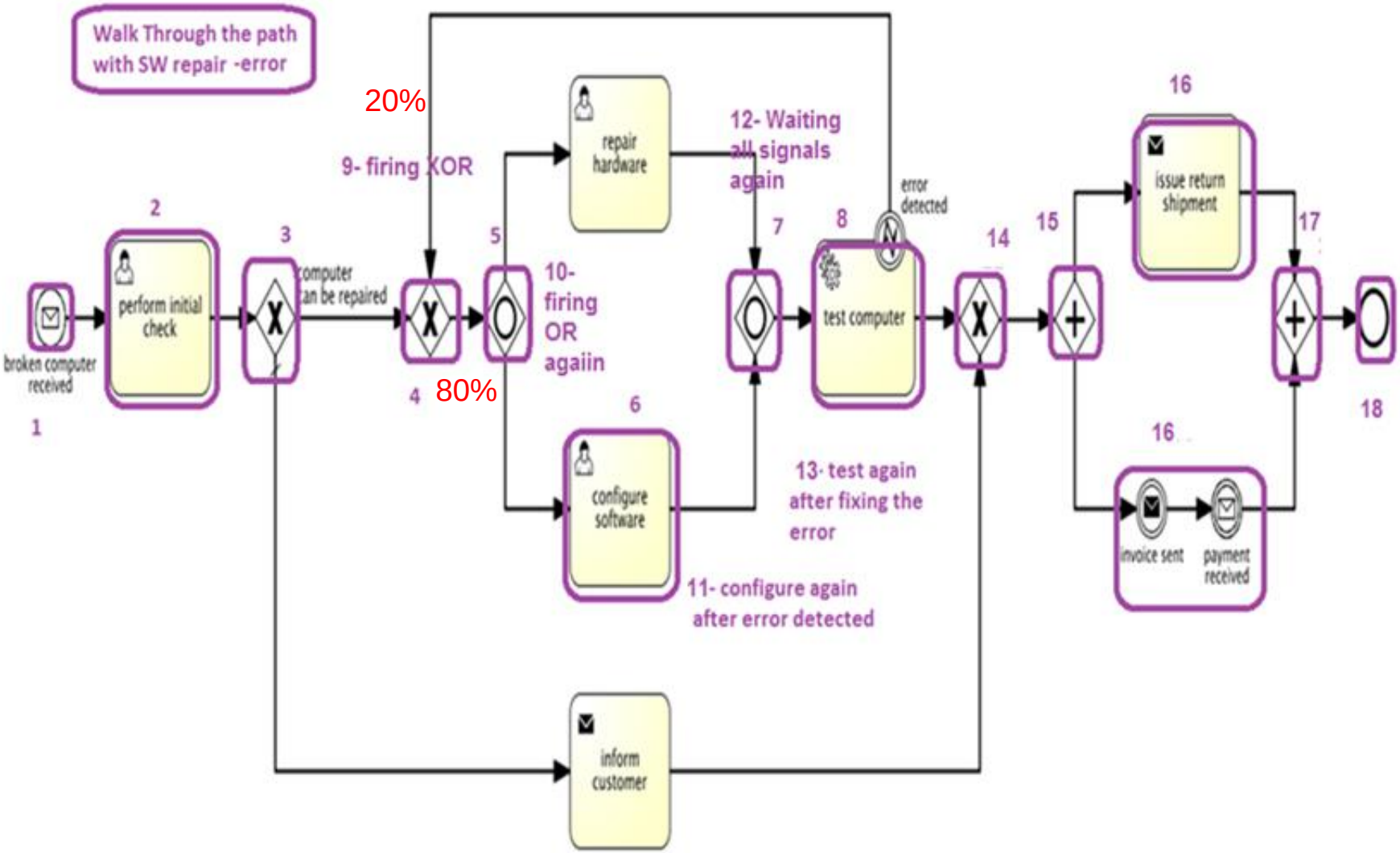

Business Process simulation
Single instance Simulation

Calculate the path for pc can be repaired – SW with error

Total Cost for one instance run

=Initial check + [configure SW + test pc]/0.8+ issue shipment + invoice+ payment

= 5min*40/60 + [(1hour*40) +(15 min*40/60)]/0.8 + 10min*40/60 + 1.5 + (30min*40/60)

= 3.33 +[40 +10]/0.8 + 6.66 + 21.5 = 93.99 €

Total time for one instance run :

= 5 min +[(1 hour) + (15 min)]/0.8+ max(10 min, 30 min)

= 278.75 min = 4.64 hours

Single instance Simulation/multi resources

- Consider the following data for the computer repair example:

  Activity processing times

  - Perform initial check up: 5 min
  - Repair hardware: 3 hours
  - Configure Software: 1 hour
  - Inform customer: 5 min
  - Test computer: 15 min
  - Issue shipment: 10 min
  - Payment received : 30 min

  Cost

  - Technician: 40 € / hour, Clerk: 30 € /hour
  - Each invoice sent: 1.5 €

MULTI RESOURCES

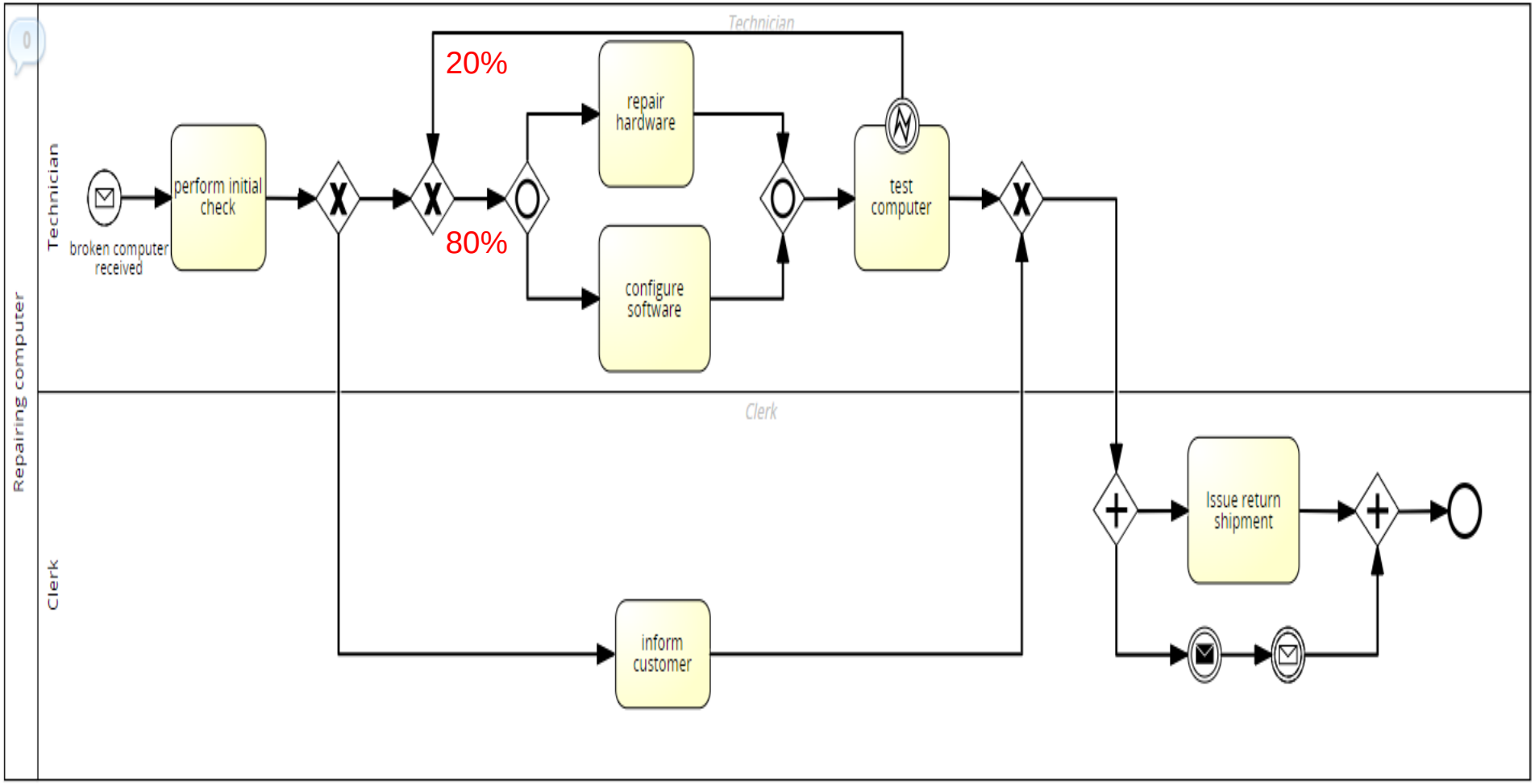

COST FOR MULTI RESOURCES

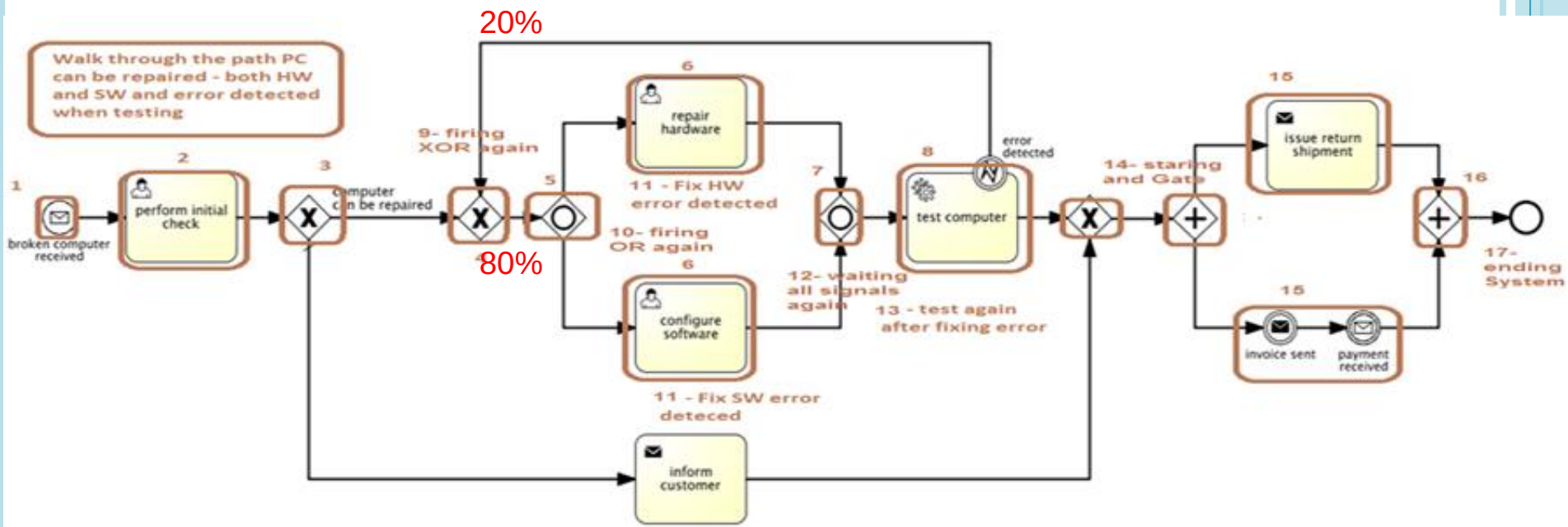

- Cost of technician resource=

5min*40/60 + [3hours*40 +1hour*40+(15 min*40/60)]/0.8 = 3.33 + [120 +40+(10)]/0.8=215.83 €

- Cost of clerk resource=

10min*30/60 + 1.5 + (30min*30/60) = 21.5 €

Total=222.49+21.5=243.99 €

Any Questions?